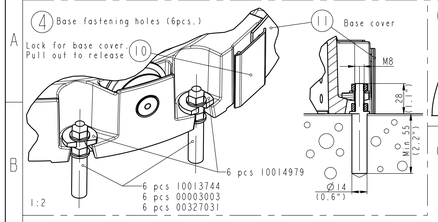

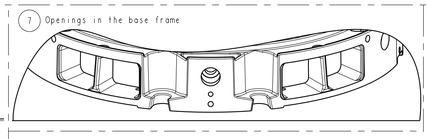

12 MAINS SUPPLY 3x2.5mm2 (230V 10A) Pipe ø25
Note: wire terminate 500mm (20") above the floor

13 Suction motor control cable 2x1.5mm2 Pipe ø25
Note: wire terminate 500mm (20") above the floor

16 Intra cable Pipe ø25
Note: wire terminate 500mm (20") above the floor

14 Assistant call / door opening cable 4x0.75mm2
Note: wire terminate 500mm (20") above the floor

17 CAT6 / RJ45 (Ethernet)
Note: cable connector terminate 350±50 mm (14±2") above the floor

18 CAT6 / RJ45 (Dixi)
Note: cable connector terminate 350±50 mm (14±2") above the floor

19 S-video or USB (Intracom)
Note: cable connector terminate 350±50 mm (14±2") above the floor

20 VGA cable
Note: cable connector terminate 350±50 mm (14±2") above the floor

A AIR SUPPLY PIPE
Air pressure 550-900kPa. Copper pipe Ø12/10mm (0.5"/0.4")
Air supply line must be supplied with a manual valve which close the line according to the dental unit.
Installation orientation of the manual valve for air is shown in the picture below.
At the pipe end a nipple with male thread G3/8

B WATER SUPPLY PIPE
Water pressure 300-900kPa. Copper pipe Ø12/10mm (0.5"/0.4")
Water supply line must be supplied with a manual valve which close the line according to the dental unit.
Installation orientation of the manual valve for water is shown in the picture below.
At the pipe end a nipple with male thread G3/8

C Connection area for electricity and telecommunication

D SUCTION LINE PIPE
Plastic pipe Ø50/46mm (2.0"/1.8")

E DRAIN LINE PIPE
Plastic pipe Ø50/46mm (2.0"/1.8")
(or copper Ø35/32mm (1.4"/1.3"))

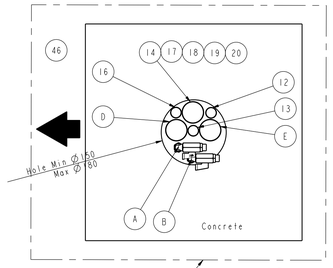

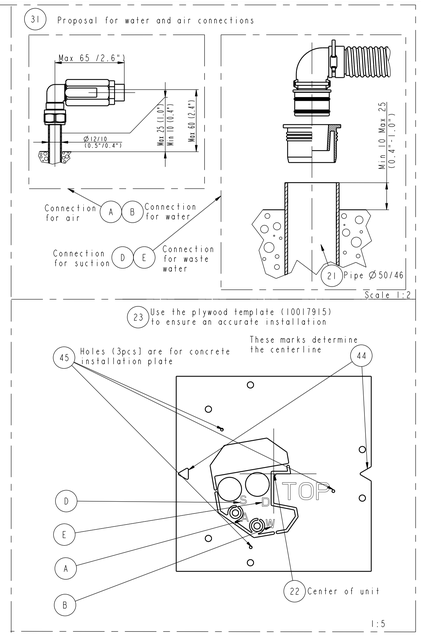

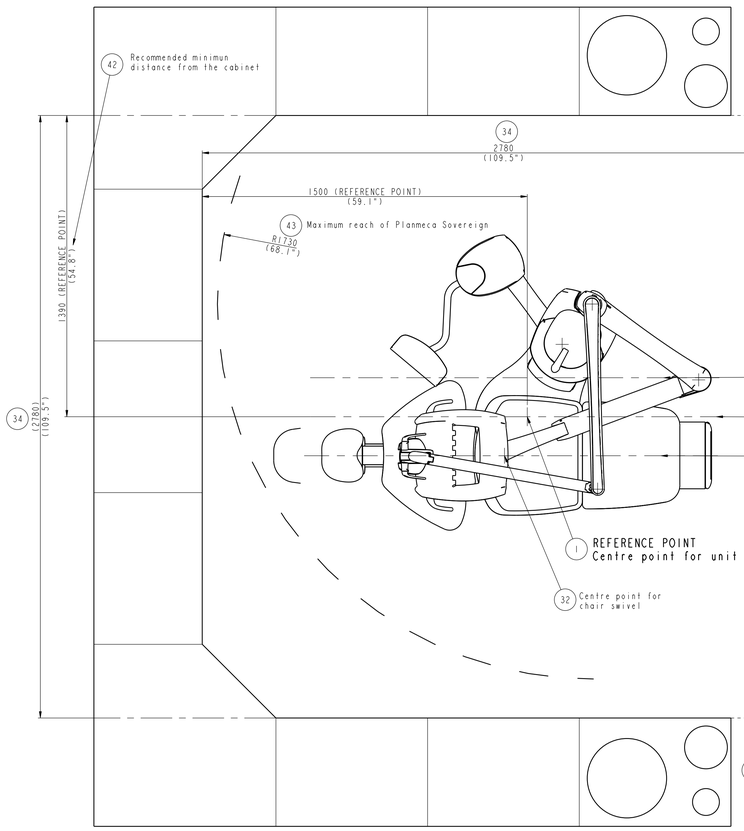

39 For measures see the Technical Manual (10016940)

40 Planmeca Sovereign Balance

SCALE 1:10

0 500 1000

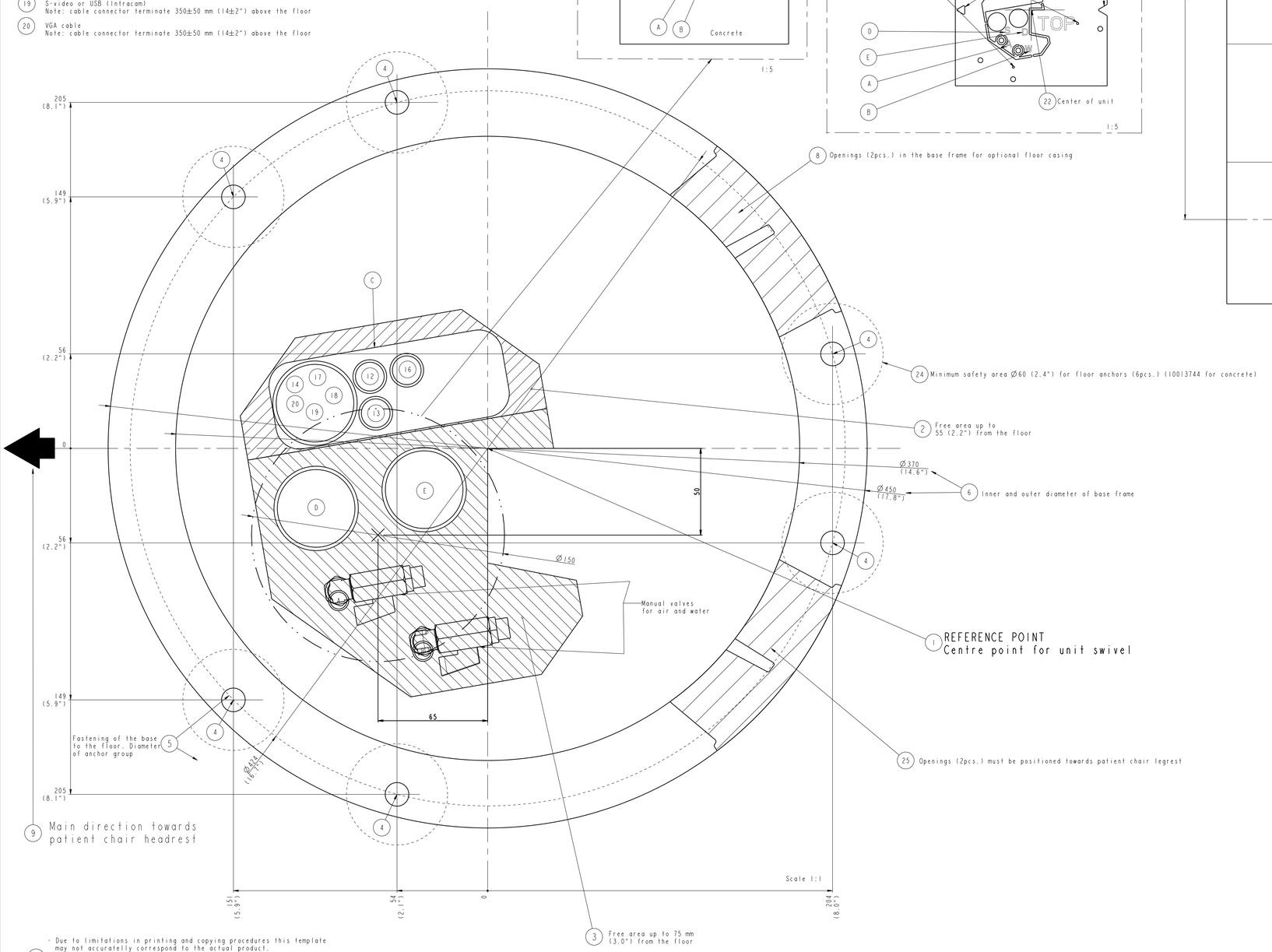

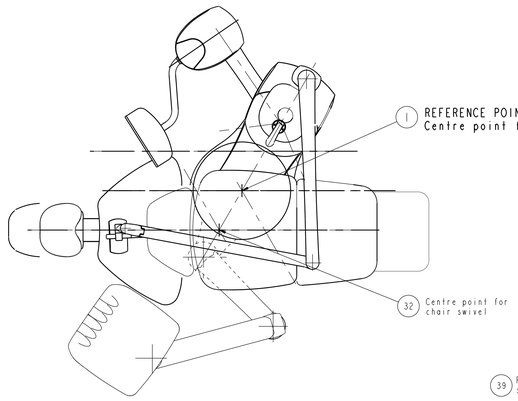

39 For measures see the Technical Manual (10016940)

41 Planmeca Sovereign Side

SCALE 1:10

0 500 1000

26
- Due to limitations in printing and copying procedures this template may not accurately correspond to the actual product.
- All dimensions are approximate
- All dimensions are subject to change without a prior notification
- Planmeca Oy refers the right to change this template and installation scheme with out a prior notification.

27 The unit MUST be fastened to the floor prior to operation

Translations for other languages are shown in the installation manual.

PLANMECA
Asentajankatu 6
FI-00880 Helsinki, Finland
Tel. +358 20 7795 500
Fax +358 20 7795 566
www.planmeca.com

Model Name: 264974	Designer: Feiring	Date: 04.06.13	Revision: -
Drawing Name: 10015849-10	Description: Installation template		
Code: 10015849-10	Version: 623	Product:	
Scale: 1:1	Paper: A0	Units: mm (inch)	Sheet: 1/1

PLANMECA SOVEREIGN